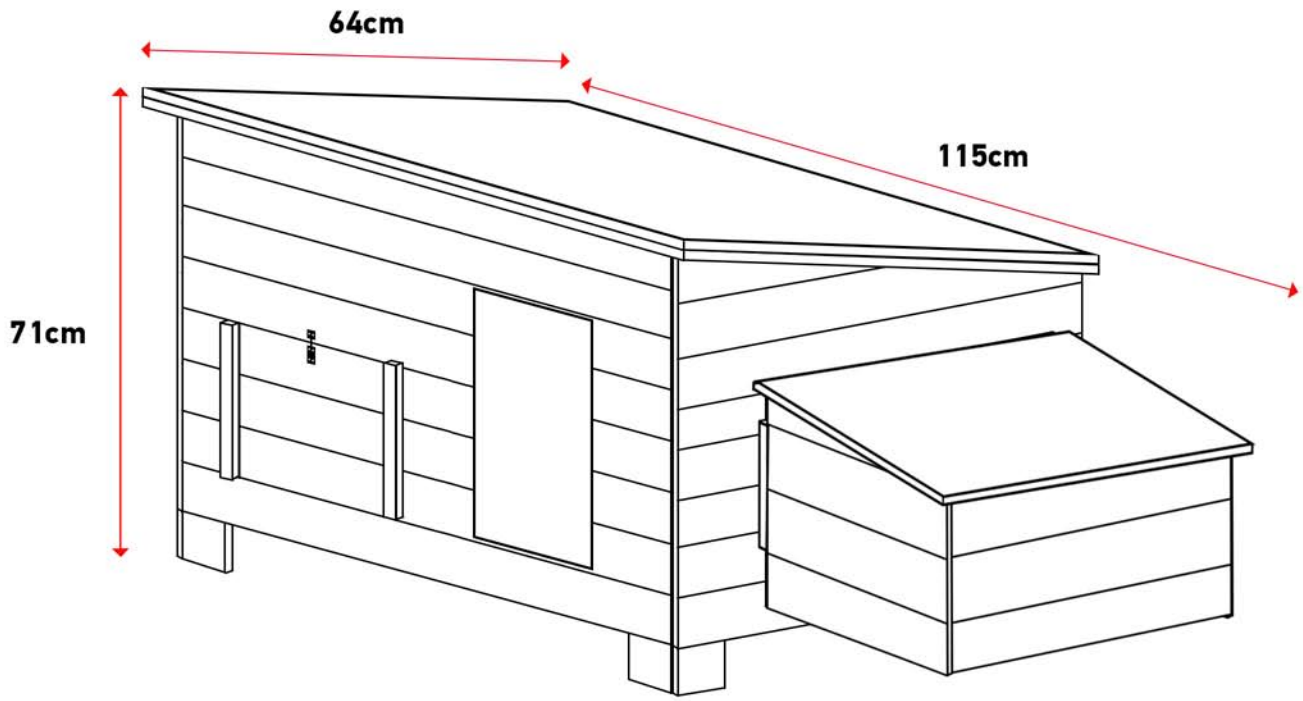
64cm
115cm
71cm